Q-railing

Technical Report

# EASY GLASS® PRO

## Topmount (6906)
## Topmount F-profile (6909)

## Fascia mount (6915)
## Fascia mount Y-profile (6916)

# UK

Testing conducted by/at:
Q-railing Europe GmbH & Co.KG
Marie Curie Strasse 8-14
46446 Emmerich am Rhein

## 1. Introduction

This report describes tests conducted at the test site of Q-railing Europe GmbH & Co.KG on Easy Glass® Pro top model 6906, Pro fascia model 6915, Pro -F model 6909 and Pro -Y model 6916 from Q-railing's catalogue, assembled in various situations as shown.

The tests were done according to **BS 6180/BS 6399 and En 1991-1-1**

## 2. Test arrangement

Various barrier specimens were mounted on to a rigid concrete structure with a test rig from steel with sufficient strength to withstand loads applied to it.
For each test, load was applied to the glass in a hand railing height. (On top of the glass panel)

Load was measured with a load cell.

Mechanical indicators were used to measure the deflection of the barrier from its neutral position.

## 3. Materials

1. Base shoe.
   - Aluminum base model Top article number 16.6906.000.18
   - Aluminum base model F article number 16.6909.500.18
   - Aluminum base model fascia article number 16.6915.000.18
   - Aluminum base model Y article number 16.6916.500.18

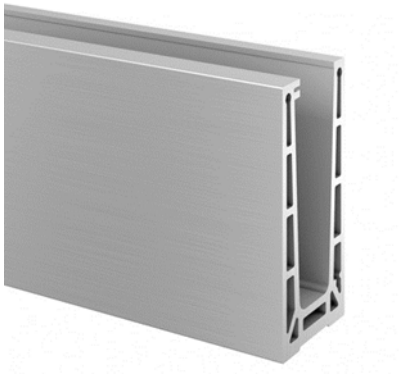

Easy Glass Pro Top

Easy Glass Pro fascia



**Q-railing GmbH & Co. KG**
Marie-Curie straße 8-14 | D-46446 | Emmerich am Rhein | Germany
T +49 (0) 2822-91569-0 | F +49 (0) 2822-91569-70
E sales@q-railing.de | www.q-railing.com

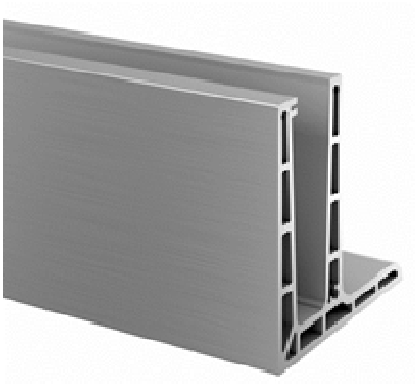

**Easy Glass Pro F**

**Easy Glass Pro – Y**

2. Anchoring
   Injection system Q VMZ-IG 90 M12 for model 6906, article number 19.4512.124.15
   High load anchor Q SZ-S12/10 Ø12 M8 for model 6915 and 6916 article number 19.4712.110.15

   The 316 grade anchors, article numbers ending on .14 can also be used
3. Inlay
   PP plastic and EPDM rubber sets article number 19.6901.xxx.00 for fixed and 19.6906.xxx.00 for adjustable glass

4. Glass
   Laminated toughened glass are been tested with a PVB film with thickness of 0.76 mm. As alternative also PVB film thickness of 1.52 may be used. See the results table for the glass dimension.



**Q-railing GmbH & Co. KG**
Marie-Curie straße 8-14 | D-46446 | Emmerich am Rhein | Germany
T +49 (0) 2822-91569-0 | F +49 (0) 2822-91569-70
E sales@q-railing.de | www.q-railing.com

**4 . Arrangement of test assembly**

The test was done for the adjustable fixing on the worst case of the glass adjustment which is adjusting the glass to 89 degrees measured from out side like shown in the following drawing and this is also the same for the other profiles.

In side

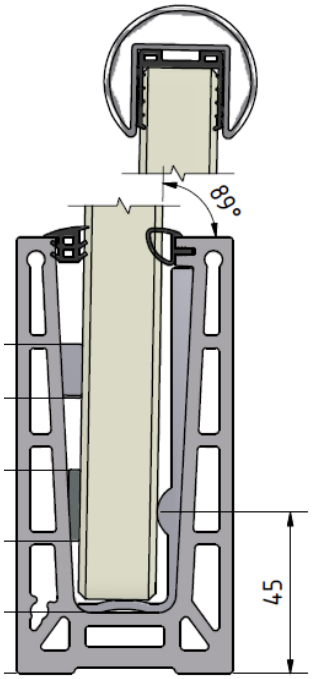


Out side

.



**Q-railing GmbH & Co. KG**
Marie-Curie straße 8-14 | D-46446 | Emmerich am Rhein | Germany
T +49 (0) 2822-91569-0 | F +49 (0) 2822-91569-70
E sales@q-railing.de | www.q-railing.com

Line load test

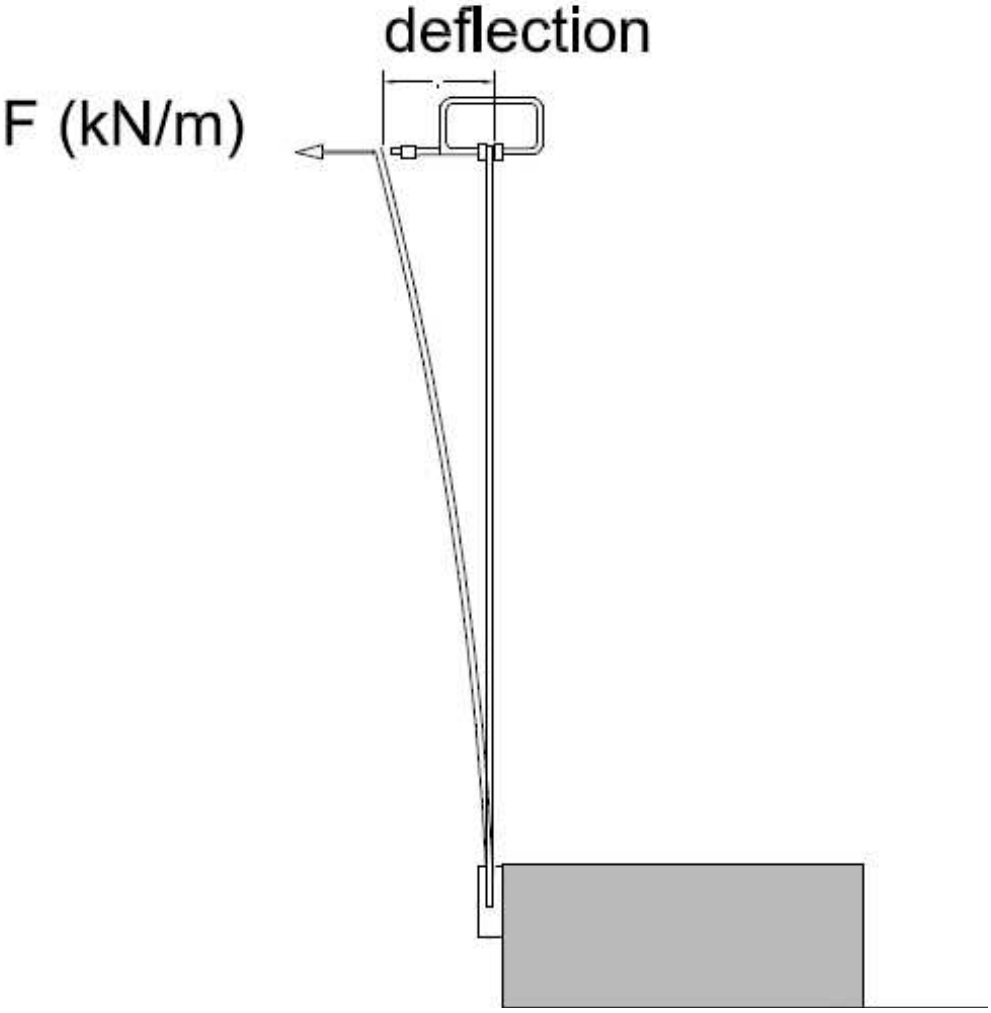




**Q-railing GmbH & Co. KG**
Marie-Curie straße 8-14 | D-46446 | Emmerich am Rhein | Germany
T +49 (0) 2822-91569-0 | F +49 (0) 2822-91569-70
E sales@q-railing.de | www.q-railing.com

## 5. Test results

The results are shown in tables 1 and 2.

Table 1 Top & fascia mount

| | Glass mm. t. | Dimension mm. n x w x H | barrier height mm | Line Load 0.36 kN/m | 0.74 kN/m | 1.50 kN/m | 3.00 kN/m | Fixing type |
|---|---|---|---|---|---|---|---|---|
| | | | | deflection mm. (at hand rail height) | | | | |
| 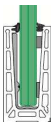 | 20.76 | 1x1000x1100 | 1100 | 20.9 | 41.7 | 85.0 | | Top Adj. 89 deg. |
| | 16.76 | 1x1000x1100 | 1100 | 22.1 | 48.2 | 89.0 | | Top Adj. 89 deg. |
| | 12.76 | 1x1000x1100 | 1100 | 27.5 | 74.0 | | | Top Adj. 89 deg. |
| | 15 | 1x1000x1100 | 1100 | 9.3 | 19.8 | 70.0 | | Top Adj. 89 deg. |
| | 19 | 1x1000x1100 | 1100 | 6.1 | 14.7 | 64.0 | | Top Adj. 89 deg. |
| 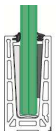 | 20.76 | 1x1000x1100 | 1100 | | | | 90.0 | Top Fixed |
| | 16.76 | 1x1000x1100 | 1100 | 12.9 | 30.2 | 61.0 | | Top Fixed |
| | 12.76 | 1x1000x1100 | 1100 | 16.7 | 37.4 | | | Top Fixed |
| | | | | | | | | |
| | 12 | 1x1000x1100 | 1100 | 16.7 | 37.4 | | | Top Fixed |
| | 15 | 1x1000x1100 | 1100 | 8.3 | 17.6 | 37.8 | | Top Fixed |
| | 19 | 1x1000x1100 | 1100 | 4.1 | 9.7 | 24.0 | | Top Fixed |
| 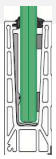 | 20.76 | 1x1000x1200 | 1100 | 8.9 | 22.5 | 51.0 | | Fascia Adj. 89 deg. |
| | 16.76 | 1x1000x1200 | 1100 | 17.9 | 57.0 | 136.0 | | Fascia Adj. 89 deg. |
| | 12.76 | 1x1000x1200 | 1100 | 32.8 | 102.0 | | | Fascia Adj. 89 deg. |
| | 15 | 1x1000x1200 | 1100 | 10.3 | 27.9 | 100.0 | | Fascia Adj. 89 deg. |
| | 19 | 1x1000x1200 | 1100 | 7.1 | 26.2 | 82.0 | | Fascia Adj. 89 deg. |
| 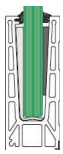 | 20.76 | 1x1000x1200 | 1100 | 7.6 | 20.4 | 49.0 | | Fascia fixed. |
| | 16.76 | 1x1000x1200 | 1100 | 12.1 | 28.4 | 63.0 | | Fascia fixed. |
| | 12.76 | 1x1000x1200 | 1100 | 33.4 | 73.0 | | | Fascia fixed. |
| | 15 | 1x1000x1200 | 1100 | 10.6 | 22.0 | 54.5 | | Fascia fixed. |
| | 19 | 1x1000x1200 | 1100 | 5.2 | 12.0 | 34.0 | 84.0 | Fascia fixed. |

n= number of panels
according to :
BS 6180/BS 6399 and En 1991-1-1



**Q-railing GmbH & Co. KG**
Marie-Curie straße 8-14 | D-46446 | Emmerich am Rhein | Germany
T +49 (0) 2822-91569-0 | F +49 (0) 2822-91569-70
E sales@q-railing.de | www.q-railing.com

Table 2 test results Pro. Y & F

| F | | | | Line Load | | | | |
|---|---|---|---|---|---|---|---|---|
| 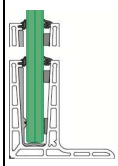 | Glass mm. t. | Dimension mm. n x w x H | barrier height mm | 0.36 kN/m | 0.74 kN/m | 1.50 kN/m | 3.00 kN/m | Fixing type |
| | | | | deflection mm. (at hand rail height) | | | | |
| | | | | | | | | |
| | 20.76 | 1x1000x1200 | 1100 | 8.8 | 18.7 | 38.61 | 83 | adjustable |
| | 16.76 | 1x1000x1200 | 1100 | 12.9 | 28.24 | 58.13 | | adjustable |
| | 15 | 1x1000x1100 | 1100 | 16.52 | 36.33 | 111 | | adjustable |
| | 19 | 1x1000x1100 | 1100 | 9.96 | 28.85 | 82 | | adjustable |
| | | | | | | | | |
| | 20.76 | 1x1000x1100 | 1101 | | | | | fixed |
| | 17.52 | 1x1000x1100 | 1100 | 19.33 | 38 | 77 | | fixed |
| | 16.76 | 1x1000x1100 | 1100 | 14.21 | 31.6 | 67.5 | | fixed |
| | 12 | 1x1000x1100 | 1100 | 15.43 | 20.92 | 34 | | fixed |
| | 15 | 1x1000x1100 | 1100 | 10.08 | 13.93 | 23.18 | | fixed |
| | 19 | 1x1000x1100 | 1100 | 6.15 | 8.62 | 13.55 | 44.96 | fixed |

| Y | | | | | | | | |
|---|---|---|---|---|---|---|---|---|
| | 20.76 | 1x700x1200 | 1100 | 12.19 | 26.66 | 54.9 | 112.3 | adjustable |
| | 16.76 | 1x1000x1200 | 1100 | 18 | 40.76 | 85 | | adjustable |
| | 12.76 | 1x1000x1200 | 1100 | 26.9 | 47.8 | 98 | | adjustable |
| | 15 | 1x1000x1200 | 1100 | 11.73 | 31.65 | 105 | | adjustable |
| | 19 | 1x1000x1200 | 1100 | 8.34 | 26.22 | 79 | | adjustable |
| | | | | | | | | |
| | 20.76 | 1x1000x1200 | 1100 | | | | | fixed |
| | 15 | 1x1000x1200 | 1100 | 11.13 | 23.94 | 56 | | fixed |
| | 19 | 1x1000x1100 | 1100 | 5.82 | 14.68 | 36.58 | | fixed |

n= number of panels
CC= The distance between the adapters
according to :
BS 6180/BS 6399 and En 1991-1-1



**Q-railing GmbH & Co. KG**
Marie-Curie straße 8-14 | D-46446 | Emmerich am Rhein | Germany
T +49 (0) 2822-91569-0 | F +49 (0) 2822-91569-70
E sales@q-railing.de | www.q-railing.com

## 6. Comments

The loading was applied to the top of the glass at a height of 1.10m above finished floor level.

## 7. General overview line load

**Q-railing GmbH & Co. KG**
Marie-Curie straße 8-14 | D-46446 | Emmerich am Rhein | Germany
T +49 (0) 2822-91569-0 | F +49 (0) 2822-91569-70
E sales@q-railing.de | www.q-railing.com